INFRARED GATE OPENER SENSOR

Door and window balcony anti-theft, barrier signal

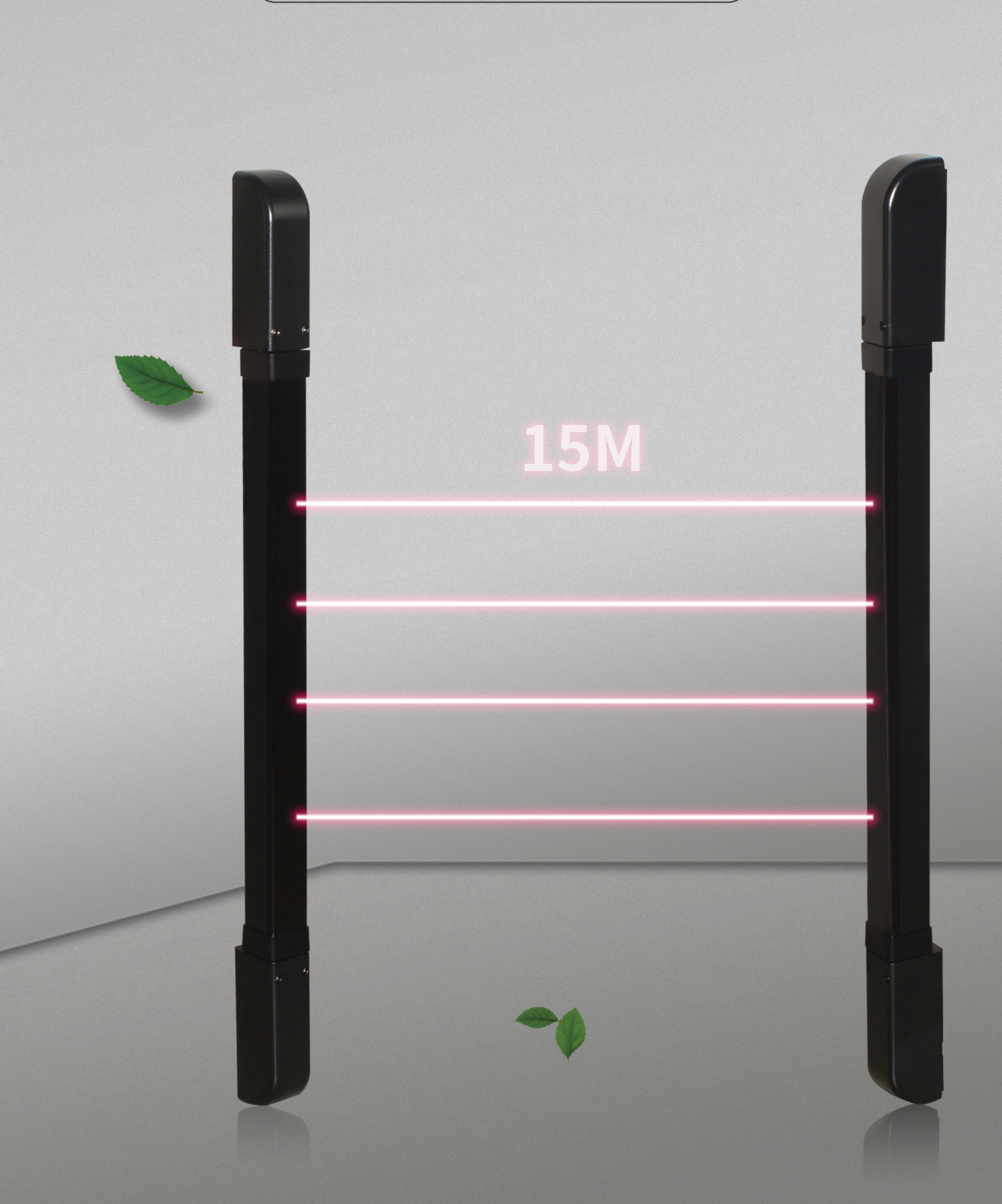

Infrared sensor

Anti-false alarm design

Smart pet-proof design

IP65 waterproof rating

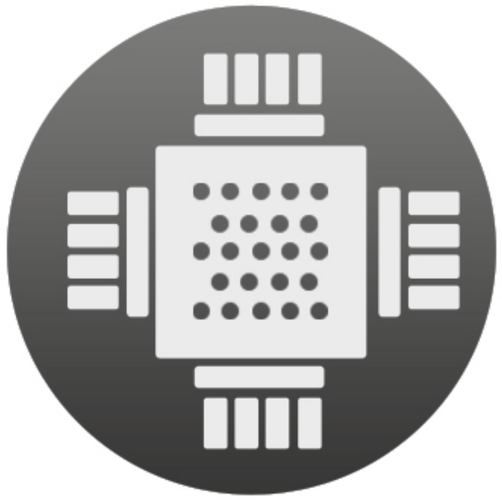

Imported chips

180 degree rotating focus

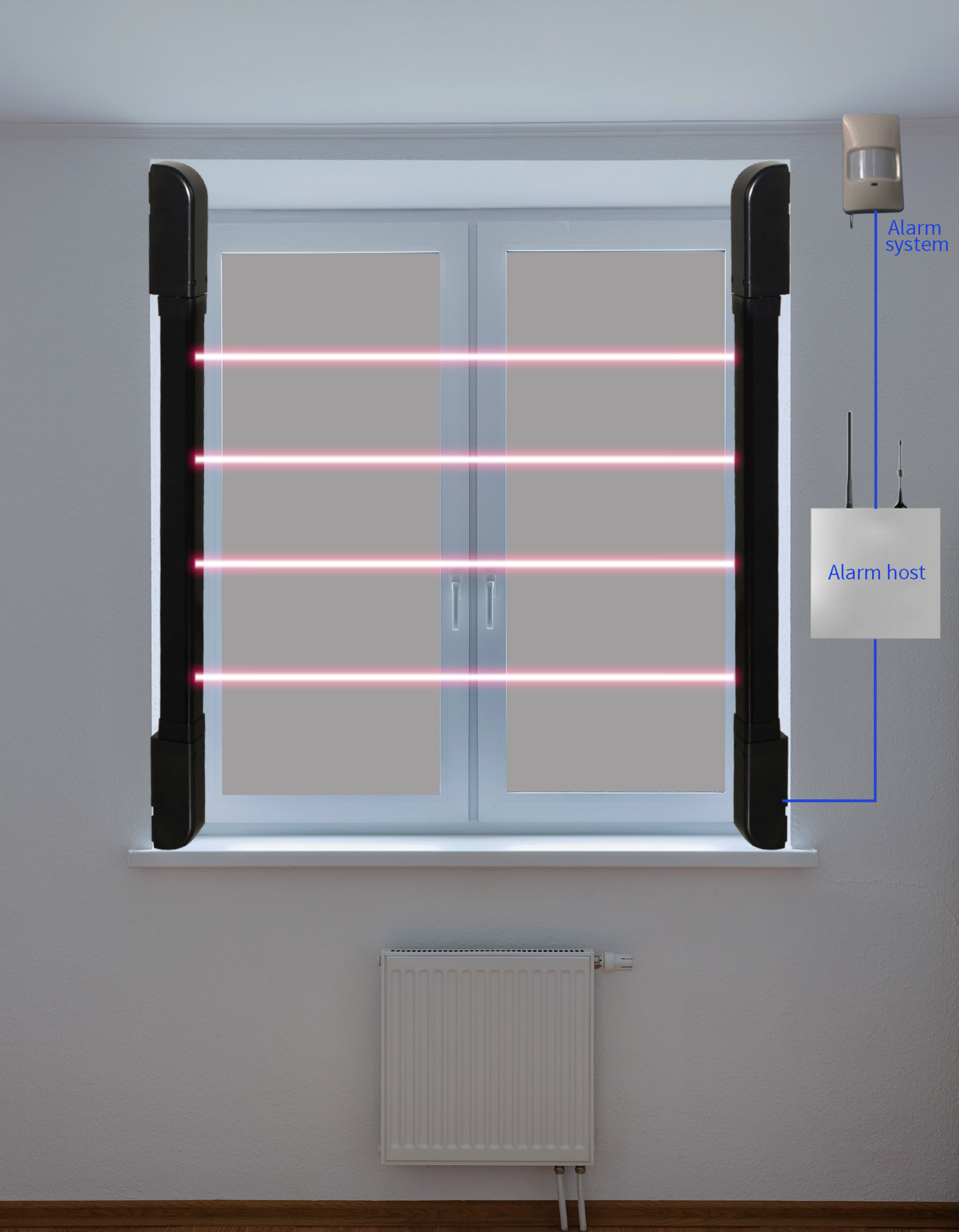

Never worry about the safety of your home when you go out.

The Infrared Gate Opener Sensor can be used with the alarm host to realize remote control/alarm.

Invisible infrared light

NobTra adopt high-quality imported industrial-grade infrared on-beam emission tube, infrared is not harmful to the eyes, the infrared beam is concentrated without scattering, good stability, and long service life.

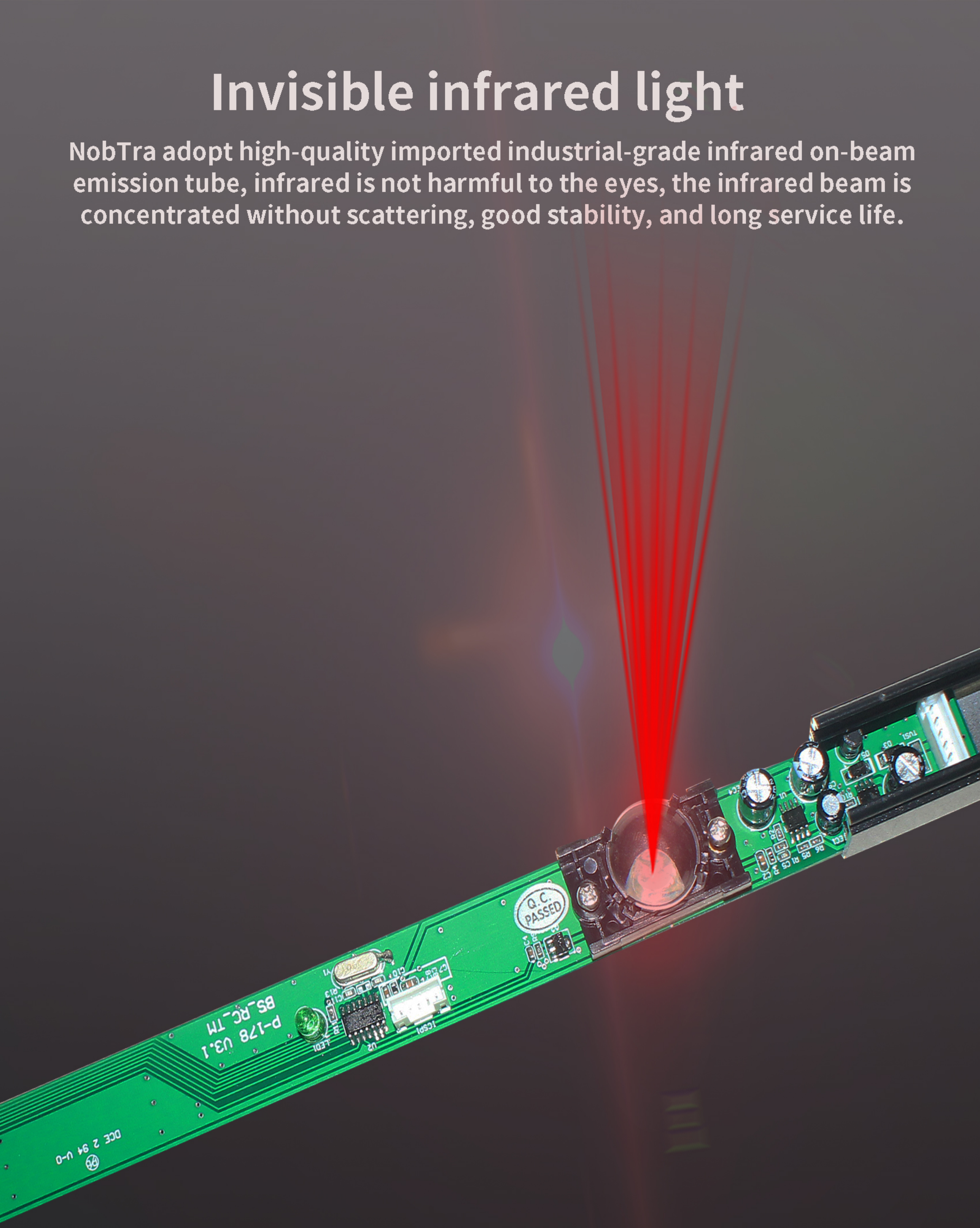

Accurate detection.Anti-report

When small animals or falling leaves outside block a beam of light, the infrared grating will not send out an alarm signal. The alarm will be triggered when the intruder blocks two or more beams at the same time for more than two seconds.

IP65 waterproof rating

NobTra Infrared Gate Opener sensor adopts a sealed and waterproof design, so there is no need to worry about the impact of the complex outdoor environment on it.Install in multiple pairs without interference with each other.

180 degree rotation

Fully rotating focus, left and right can be rotated 180 degrees arbitrarily, it is convenient to project and focus in all directions during installation, making installation easier.

Suitable place for installation

Gates

Fence

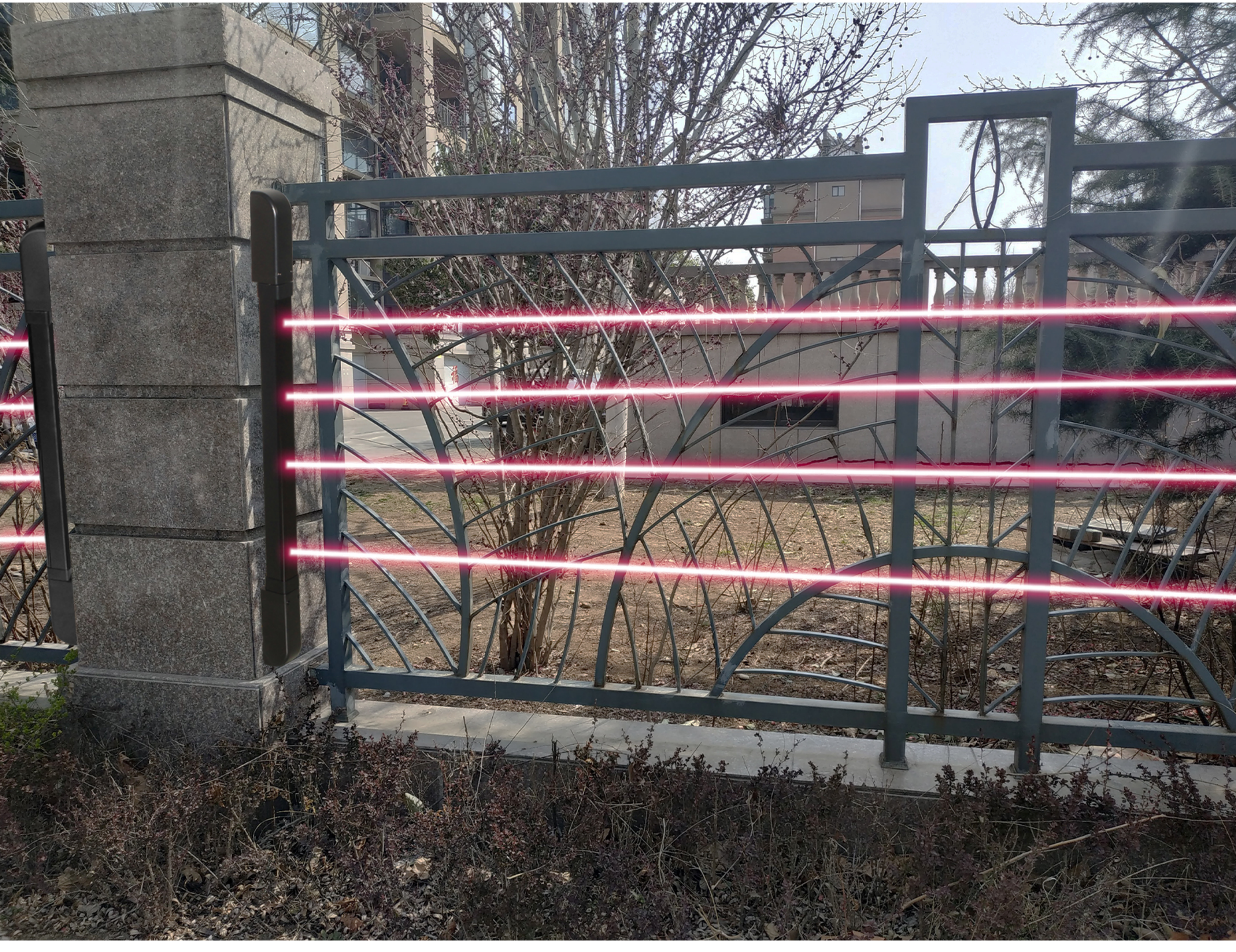

window

Automatic door anti-pinch

When the Infrared Gate Opener sensor is triggered, the door automatically rebounds to avoid pinching and safety protection.

Barrier lifting pole

A variety of specifications are available to meet your different needs.

length
30
CM

length
100
CM

length
200
CM

PRODUCT INFORMATION

PARAMETER

MODEL	PB10-4L15 PB20-8L15
Number of beams	4/8(or other long optional)
Height	30cm,100cm,200cm(Or other long optional)
Detection Distance	15M
Working Voltage	DC12-24V
Transmitter Operating Current	<50mA
Receiver Operation Current	<50mA
Response Time	50/100/150/200ms adjustable
Trigger Time	Block a beam of light,trigger in 2 seconds,block adjacent 2 beams or more,trigger immediately
Induction Method	Single beam trigger or Multi-beam trigger (can selected)
Working Temperature	-20-60°C
Ambient Temperature	90%RH In Max(No condensation)
Alarm Output	Wired Output,relay Output 30 VDC@2A,125VAC@1A
Output Way(Wired Model)	Wired transmission（NO/NC）
Rotation Angle	180 degrees horizontal
IP level	IP65
Material	Aluminum Alloy And PC Plastic

PRODUCT INFORMATION

SIZE

PB10-4L15(Beam Spacing210mm)

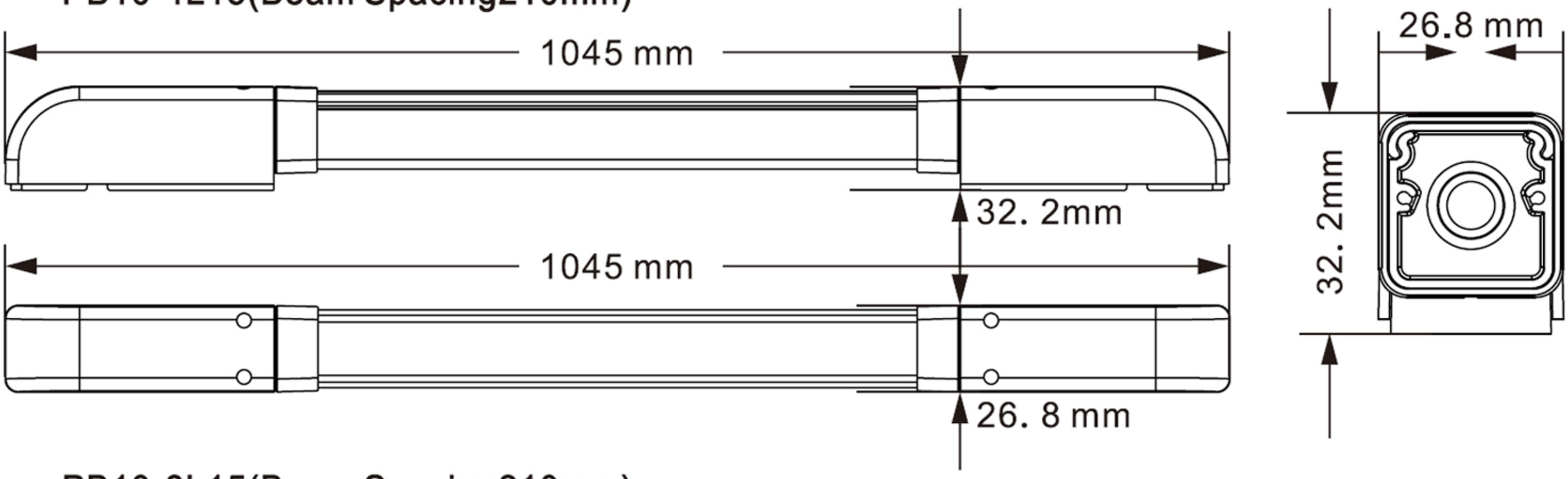

PB10-8L15(Beam Spacing210mm)

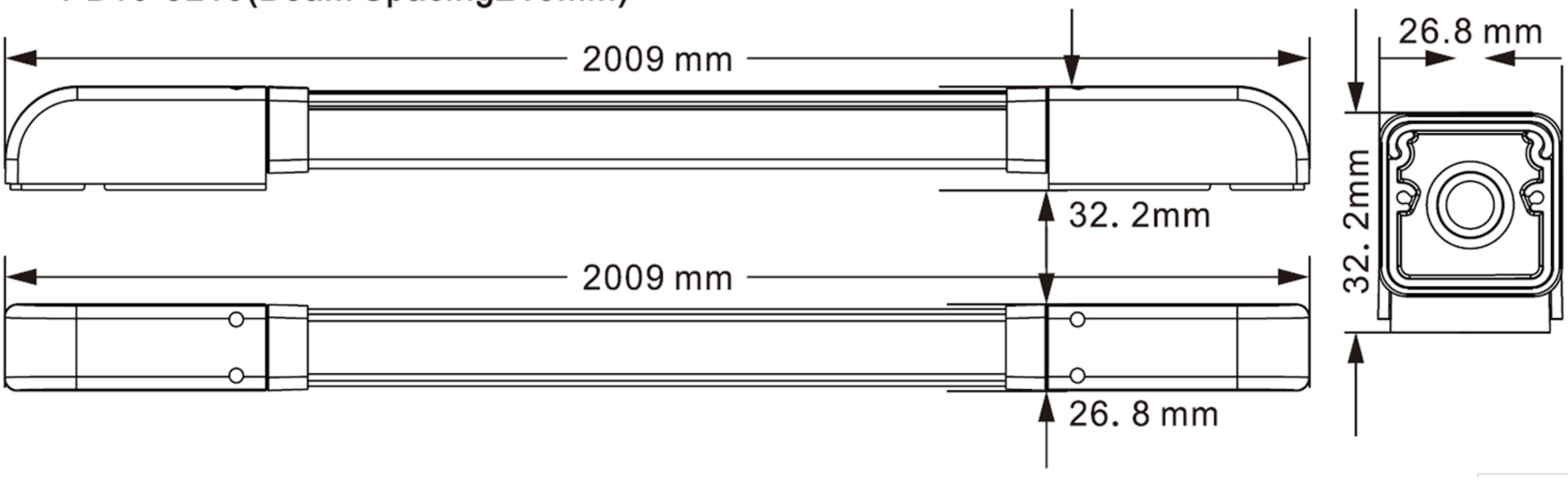

PRODUCT INFORMATION

WIRING DEFINITION

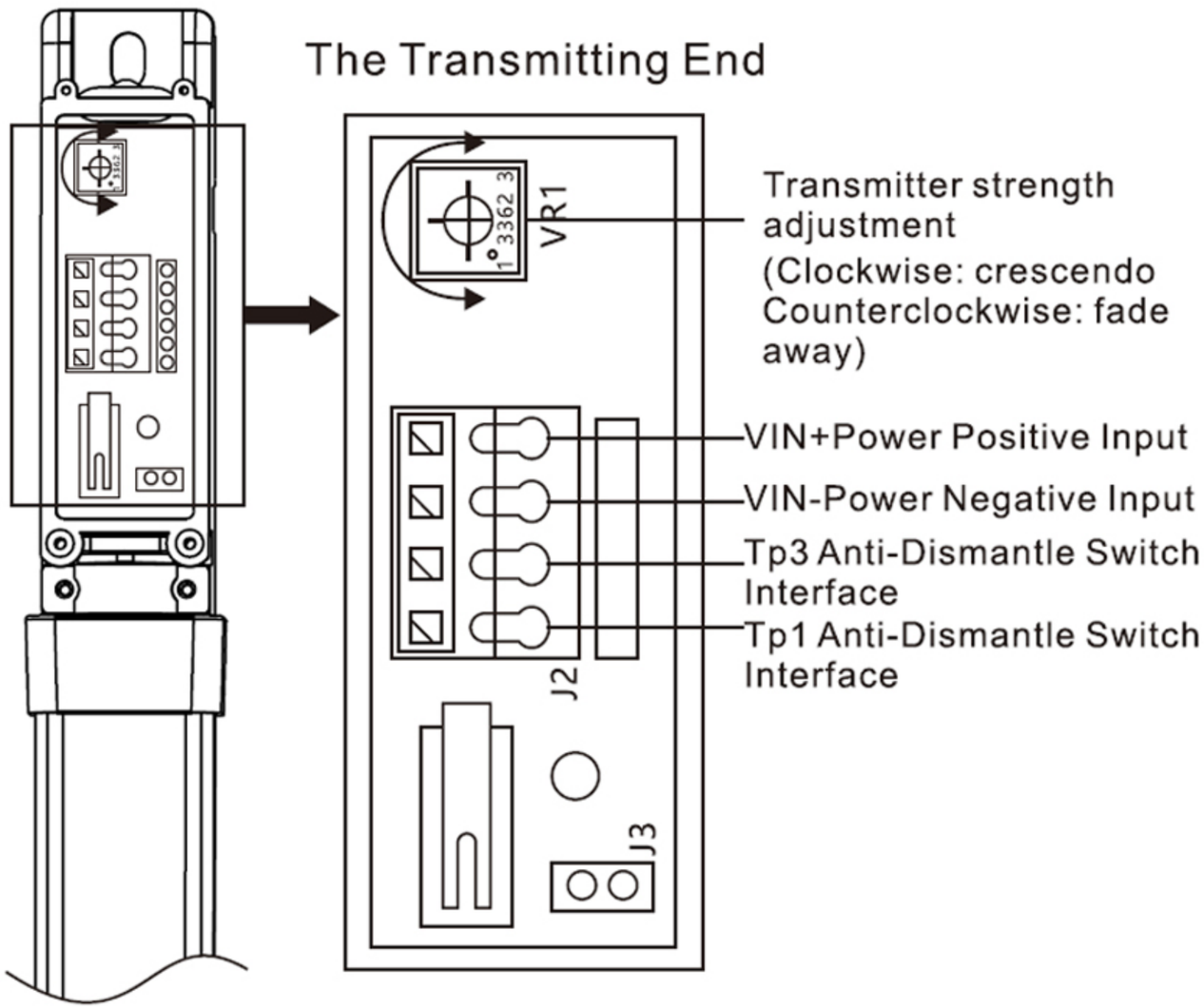

Setting:Transmitter Strength Adjustment

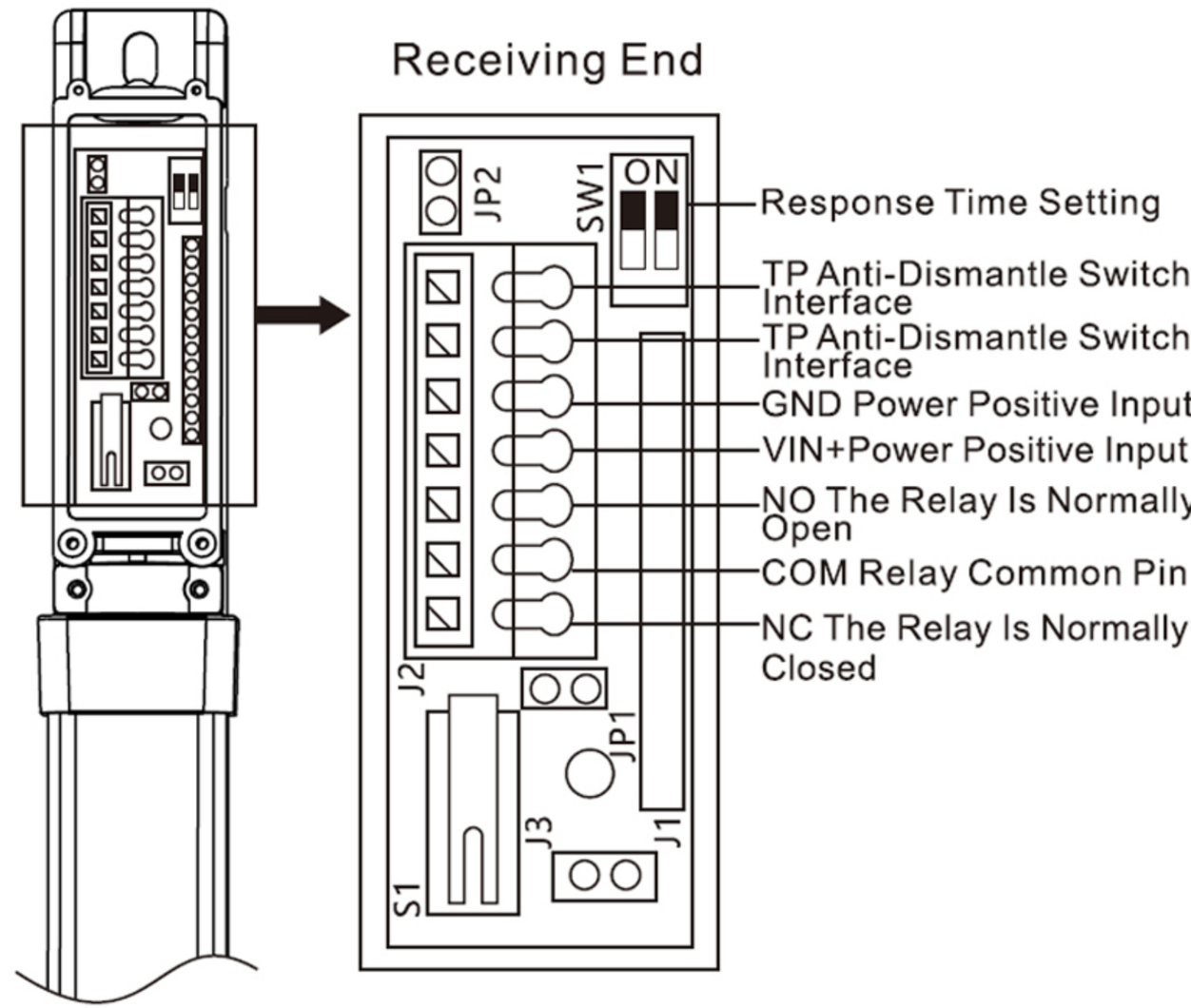

Setting:JP1,JP2, SW1

PRODUCT INFORMATION

CURTAIN PHOTOCELL INSTALLATION

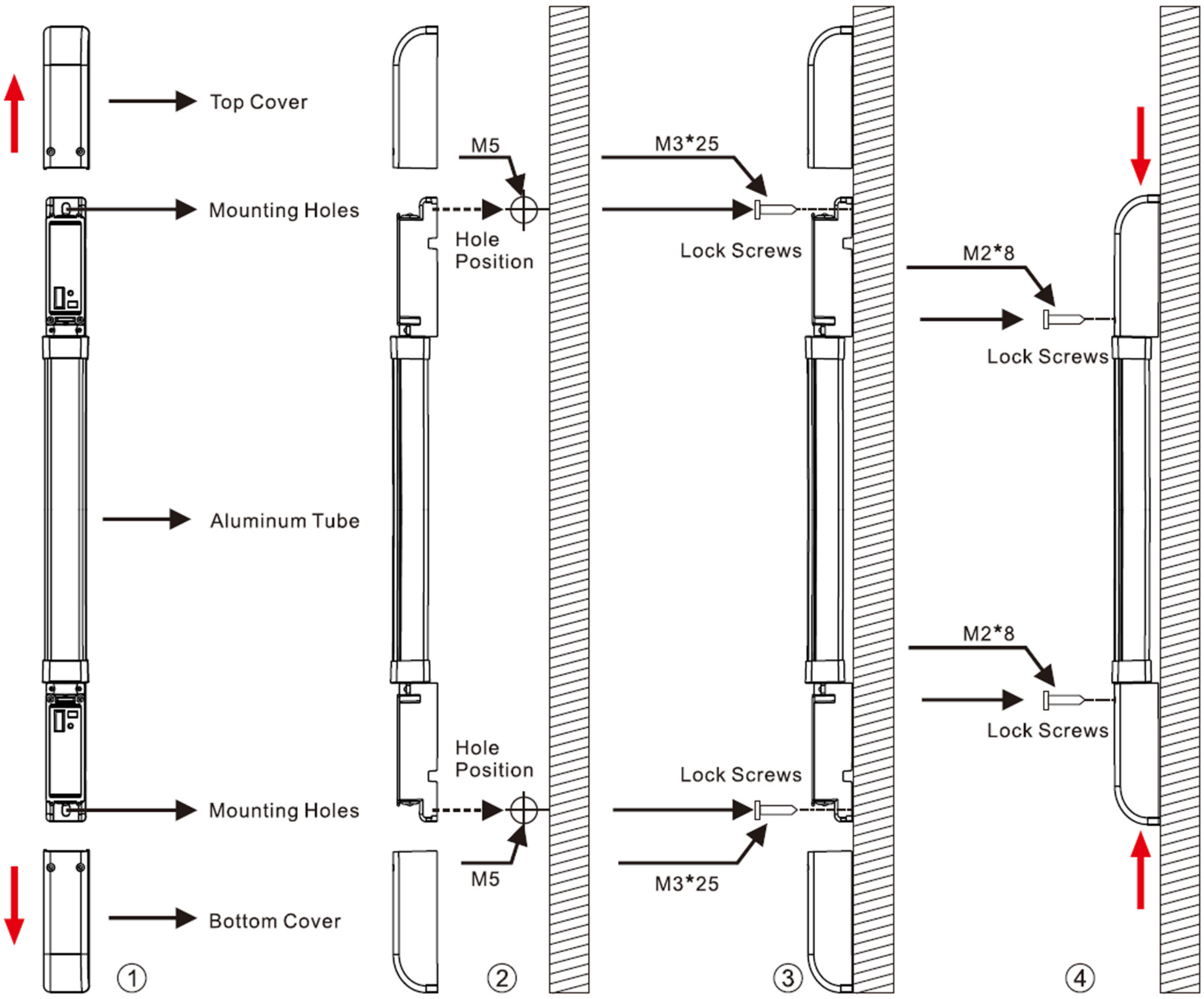

PRODUCT INFORMATION

PACKING LIST

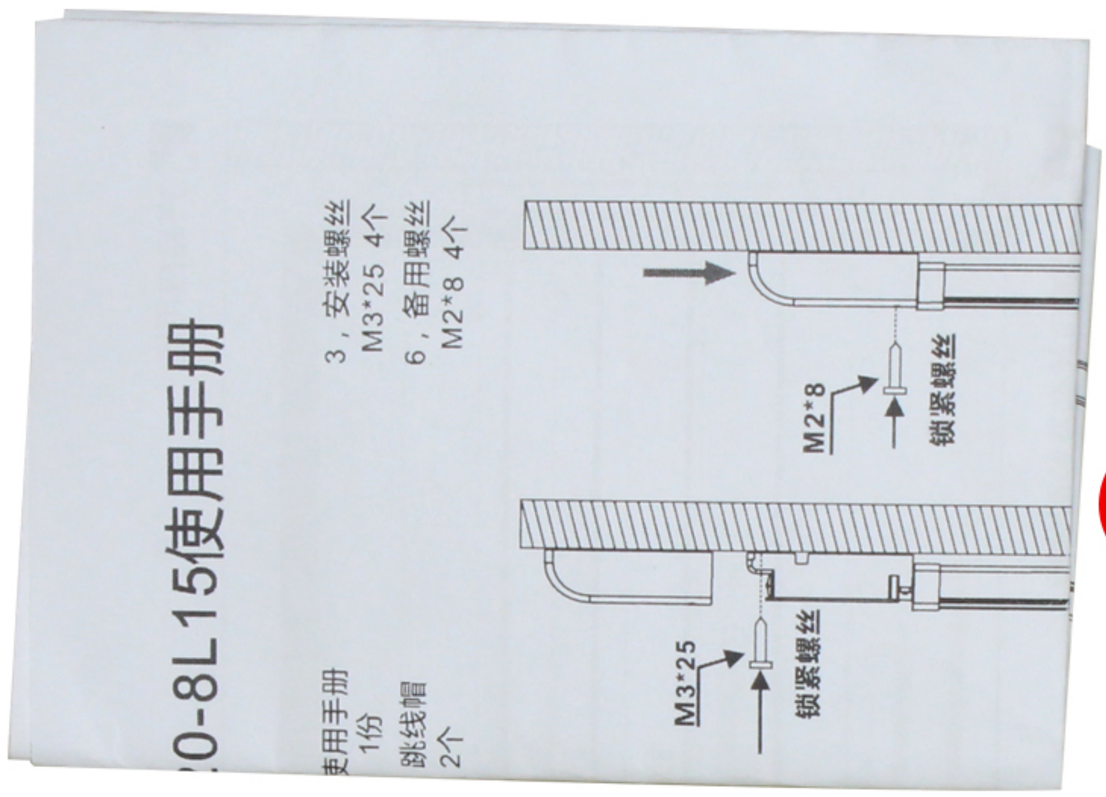

1.Curtain Photocell 1 pair	2.User Manual 1 Set	3.Mounting Screws M3*25 4Pcs
4.Wall Plug 4 Pcs	5.Jumper Cap 2 Pcs	6.Spare Screws M2*8 4Pcs